Laurent Series and z-Transform Examples case 1.B

20171227

Copyright (c) 2016 - 2017 Young W. Lim.
Permission is granted to copy, distribute and/or modify this document under the terms of the GNU Free Documentation License, Version 1.2 or any later version published by the Free Software Foundation; with no Invariant Sections, no Front-Cover Texts, and no Back-Cover Texts. A copy of the license is included in the section entitled "GNU Free Documentation License".

1.B

$$f(z) = \frac{3}{2}\frac{-1}{(z-0.5)(z-2)} \quad \overset{z^{-1}}{\Longleftrightarrow} \quad X(z) = \frac{3}{2}\frac{-z^2}{(z-2)(z-0.5)}$$

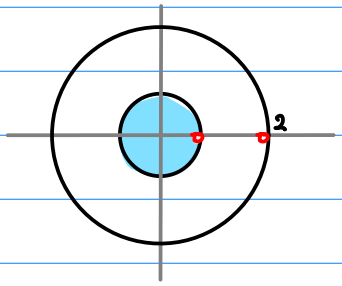

$$\sum_{n=0}^{\infty} \left[\left(\tfrac{1}{2}\right)^{n+1} - 2^{n+1}\right] z^{n}$$

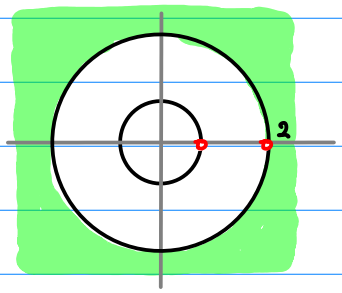

$$\sum_{n=0}^{\infty} \left[\left(\tfrac{1}{2}\right)^{n+1} - 2^{n+1}\right] z^{-n}$$

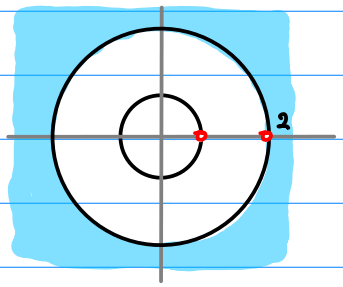

$$\sum_{n=-1}^{-\infty} \left[2^{n+1} - \left(\tfrac{1}{2}\right)^{n+1}\right] z^{n}$$

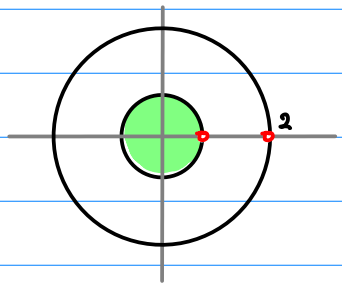

$$\sum_{n=-1}^{\infty} \left[2^{n+1} - \left(\tfrac{1}{2}\right)^{n+1}\right] z^{-n}$$

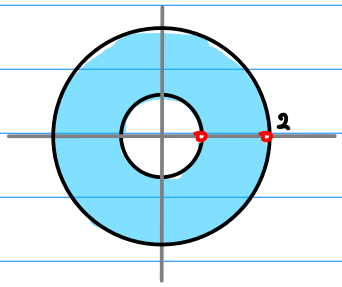

$$\sum_{n=-1}^{\infty} 2^{n+1} z^{n} + \sum_{n=0}^{\infty} \left(\tfrac{1}{2}\right)^{n+1} z^{n}$$

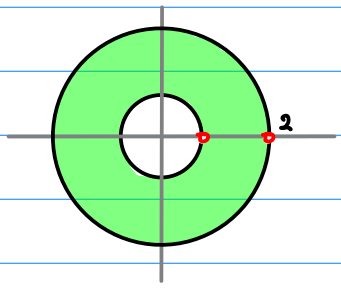

$$\sum_{n=-1}^{-\infty} 2^{n+1} z^{-n} + \sum_{n=0}^{\infty} \left(\tfrac{1}{2}\right)^{n+1} z^{-n}$$

1.B

$$f(z) = \frac{3}{2}\frac{-1}{(z-0.5)(z-2)} \overset{z^{-1}}{\Longleftrightarrow} X(z) = \frac{3}{2}\frac{-z^2}{(z-2)(z-0.5)}$$

①

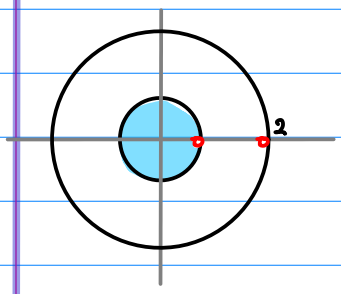

$$a_n = \begin{cases} [(\frac{1}{2})^{n-1} - 2^{n-1}] & (n \geq 0) \\ 0 & (n < 0) \end{cases}$$

$$f(z) = \sum_{n=0}^{\infty} [(\frac{1}{2})^{n+1} - 2^{n+1}] z^n$$

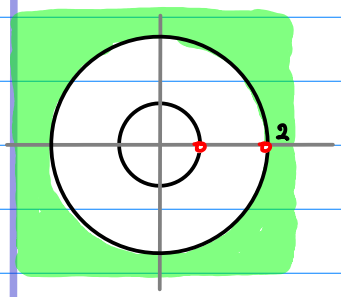

$$x_n = \begin{cases} [(\frac{1}{2})^{n-1} - 2^{n-1}] & (n \geq 0) \\ 0 & (n < 0) \end{cases}$$

$$X(z) = \sum_{n=0}^{\infty} [(\frac{1}{2})^{n+1} - 2^{n+1}] z^{-n}$$

②

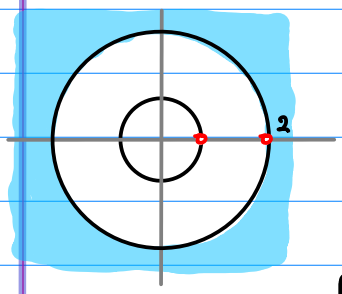

$$a_n = \begin{cases} 0 & (n \geq 0) \\ [2^{n-1} - (\frac{1}{2})^{n-1}] & (n < 0) \end{cases}$$

$$f(z) = \sum_{n=-1}^{-\infty} [2^{n+1} - (\frac{1}{2})^{n+1}] z^n$$

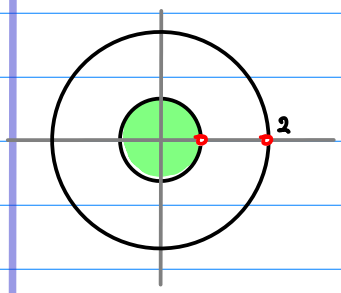

$$x_n = \begin{cases} 0 & (n \geq 0) \\ [2^{n-1} - (\frac{1}{2})^{n-1}] & (n < 0) \end{cases}$$

$$X(z) = \sum_{n=-1}^{\infty} [2^{n+1} - (\frac{1}{2})^{n+1}] z^{-n}$$

③

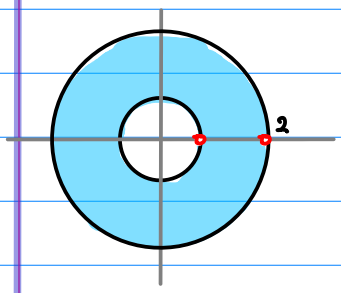

$$a_n = \begin{cases} (\frac{1}{2})^{n-1} & (n \geq 0) \\ 2^{n-1} & (n < 0) \end{cases}$$

$$f(z) = \sum_{n=-1}^{\infty} 2^{n+1} z^n + \sum_{n=0}^{\infty} (\frac{1}{2})^{n+1} z^n$$

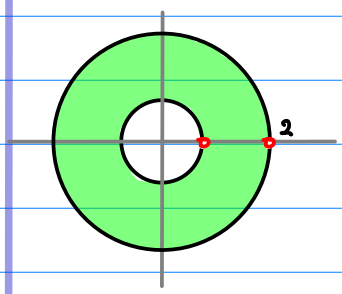

$$x_n = \begin{cases} (\frac{1}{2})^{n-1} & (n \geq 0) \\ 2^{n-1} & (n < 0) \end{cases}$$

$$X(z) = \sum_{n=-1}^{-\infty} 2^{n+1} z^{-n} + \sum_{n=0}^{\infty} (\frac{1}{2})^{n+1} z^{-n}$$

$$X(z) = \frac{3}{2}\frac{-z^2}{(z-2)(z-0.5)} = \left(\frac{0.5z}{(z-0.5)} - \frac{2z}{(z-2)}\right)$$

$0.5 < |z|$

$2 < |z|$

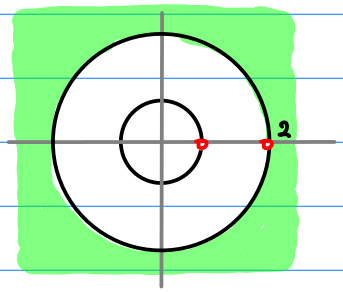

$$+\frac{\left(\frac{1}{2}\right)}{1-\left(\frac{1}{2z}\right)} - \frac{(2)}{1-\left(\frac{2}{z}\right)}$$

$$= +\sum_{n=0}^{\infty}\left(\frac{1}{2}\right)\left(\frac{1}{2z}\right)^n - \sum_{n=0}^{\infty}(2)\left(\frac{2}{z}\right)^n$$

$$= \sum_{n=0}^{\infty}\left(\frac{1}{2}\right)^{n+1} z^{-n} - \sum_{n=0}^{\infty} 2^{n+1} z^{-n}$$

$$= \sum_{n=0}^{\infty}\left[\left(\frac{1}{2}\right)^{n+1} - 2^{n+1}\right] z^{-n}$$

$$\sum_{n=0}^{\infty}\left[\left(\frac{1}{2}\right)^{n+1} - 2^{n+1}\right] z^{-n}$$

$|z| < 0.5$

$|z| < 2$

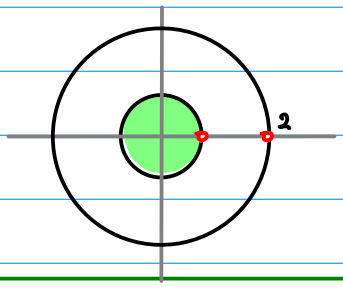

$$-\frac{(z)}{1-(2z)} + \frac{(z)}{1-\left(\frac{z}{2}\right)}$$

$$= -\sum_{n=0}^{\infty}(z)(2z)^n + \sum_{n=0}^{\infty}(z)\left(\frac{z}{2}\right)^n$$

$$= -\sum_{n=0}^{\infty} 2^n z^{n+1} + \sum_{n=0}^{\infty}\left(\frac{1}{2}\right)^n z^{n+1}$$

$$= \sum_{n=1}^{\infty}\left[\left(\frac{1}{2}\right)^{n-1} - 2^{n-1}\right] z^n$$

$$\sum_{n=-1}^{\infty}\left[2^{n+1} - \left(\frac{1}{2}\right)^{n+1}\right] z^{-n}$$

$0.5 < |z|$

$|z| < 2$

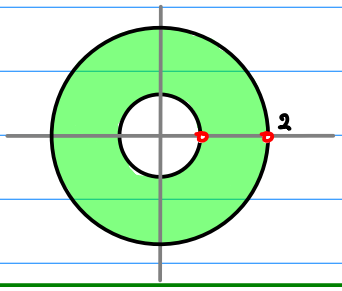

$$+\frac{\left(\frac{1}{2}\right)}{1-\left(\frac{1}{2z}\right)} + \frac{(z)}{1-\left(\frac{z}{2}\right)}$$

$$= +\sum_{n=0}^{\infty}\left(\frac{1}{2}\right)\left(\frac{1}{2z}\right)^n + \sum_{n=0}^{\infty}(z)\left(\frac{z}{2}\right)^n$$

$$= +\sum_{n=0}^{\infty}\left(\frac{1}{2}\right)^{n+1} z^{-n} + \sum_{n=0}^{\infty}\left(\frac{1}{2}\right)^n z^{n+1}$$

$$= +\sum_{n=0}^{\infty}\left(\frac{1}{2}\right)^{n+1} z^{-n} + \sum_{n=1}^{\infty}\left(\frac{1}{2}\right)^{n-1} z^n$$

$$\sum_{n=0}^{\infty}\left(\frac{1}{2}\right)^{n+1} z^{-n} + \sum_{n=-1}^{-\infty} 2^{n+1} z^{-n}$$

$$f(z) = \frac{-1}{(z-0.5)(z-2)} = \frac{2}{3}\left(\frac{1}{z-0.5} - \frac{1}{z-2}\right)$$

$|z| < 0.5$

$|z| < 2$

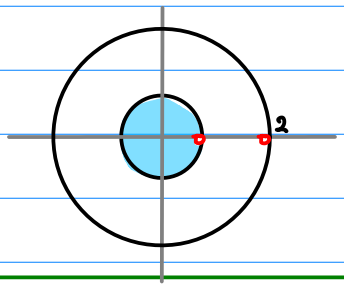

$$-\frac{(2)}{1-(2z)} + \frac{\left(\frac{1}{2}\right)}{1-\left(\frac{z}{2}\right)}$$

$$= -\sum_{n=0}^{\infty}(2)(2z)^n + \sum_{n=0}^{\infty}\left(\frac{1}{2}\right)\left(\frac{z}{2}\right)^n$$

$$= -\sum_{n=0}^{\infty} 2^{n+1} z^n + \sum_{n=0}^{\infty}\left(\frac{1}{2}\right)^{n+1} z^n$$

$$= \sum_{n=0}^{\infty}\left[\left(\frac{1}{2}\right)^{n+1} - 2^{n+1}\right] z^n$$

$$\sum_{n=0}^{\infty}\left[\left(\frac{1}{2}\right)^{n+1} - 2^{n+1}\right] z^n$$

$0.5 < |z|$

$2 < |z|$

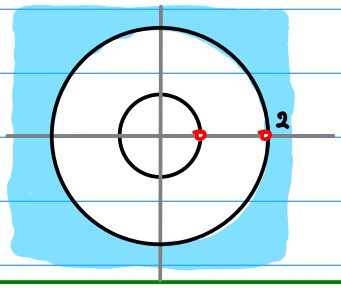

$$\frac{\left(\frac{1}{z}\right)}{1-\left(\frac{1}{2z}\right)} - \frac{\left(\frac{1}{z}\right)}{1-\left(\frac{2}{z}\right)}$$

$$= +\sum_{n=0}^{\infty}\left(\frac{1}{z}\right)\left(\frac{1}{2z}\right)^n - \sum_{n=0}^{\infty}\left(\frac{1}{z}\right)\left(\frac{2}{z}\right)^n$$

$$= +\sum_{n=0}^{\infty}\left(\frac{1}{2}\right)^n z^{-n-1} - \sum_{n=0}^{\infty}(2)^n z^{-n-1}$$

$$= \sum_{n=1}^{\infty}\left[\left(\frac{1}{2}\right)^{n-1} - 2^{n-1}\right] z^{-n}$$

$$\sum_{n=-1}^{-\infty}\left[2^{n+1} - \left(\frac{1}{2}\right)^{n+1}\right] z^n$$

$0.5 < |z|$

$|z| < 2$

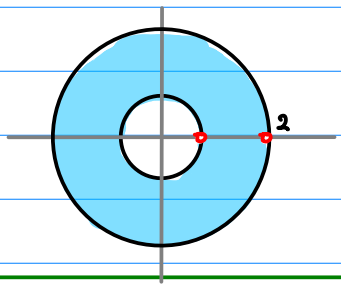

$$+\frac{\left(\frac{1}{z}\right)}{1-\left(\frac{1}{2z}\right)} + \frac{\left(\frac{1}{2}\right)}{1-\left(\frac{z}{2}\right)}$$

$$= +\sum_{n=0}^{\infty}\left(\frac{1}{z}\right)\left(\frac{1}{2z}\right)^n + \sum_{n=0}^{\infty}\left(\frac{1}{2}\right)\left(\frac{z}{2}\right)^n$$

$$= +\sum_{n=0}^{\infty}\left(\frac{1}{2}\right)^n z^{-n-1} + \sum_{n=0}^{\infty}\left(\frac{1}{2}\right)^{n+1} z^n$$

$$= \sum_{n=1}^{\infty}\left(\frac{1}{2}\right)^{n-1} z^{-n} + \sum_{n=0}^{\infty}\left(\frac{1}{2}\right)^{n+1} z^n$$

$$\sum_{n=-1}^{-\infty} 2^{n+1} z^n + \sum_{n=0}^{\infty}\left(\frac{1}{2}\right)^{n+1} z^n$$

$$f(z) = \frac{-z^2}{(z-2)(z-0.5)} = \frac{2}{3}\left(\frac{0.5z}{(z-0.5)} - \frac{2z}{(z-2)}\right)$$

Z.T. first

$$X(z) = \frac{-1}{(z-1)(z-2)}$$

$$\boxed{X(z) = \frac{-1}{(z-1)(z-2)}}$$

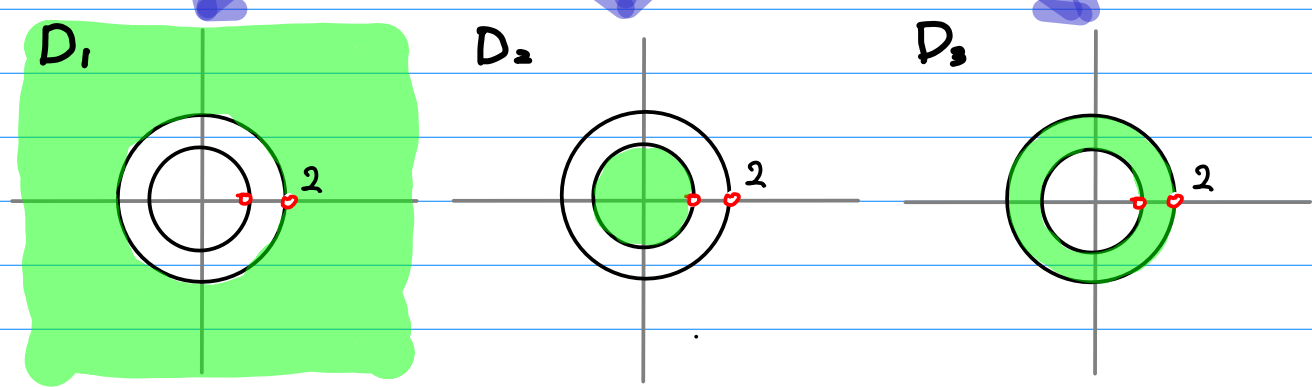

x_n? $\quad$ x_n? $\quad$ x_n?

$\|$ $\quad$ $\|$ $\quad$ $\|$

a_n $\quad$ a_n $\quad$ a_n

$f(z)$? $\quad$ $f(z)$? $\quad$ $f(z)$?

1. B

$$X(z) = \frac{-1}{(z-1)(z-2)} \xrightarrow{z^{-1}} f(z) = \frac{-0.5\,z^2}{(z-1)(z-0.5)}$$

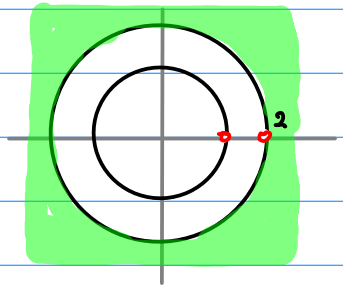

$$\sum_{n=1}^{\infty} \left[1 - 2^{-n+1}\right] z^{-n}$$

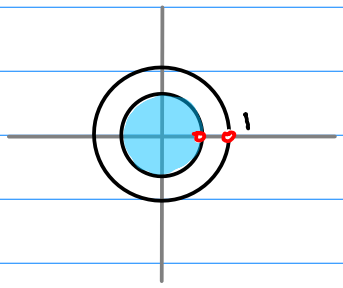

$$\sum_{n=0}^{\infty} \left[\left(\frac{1}{2}\right)^{n+1} - 1\right] z^{n}$$

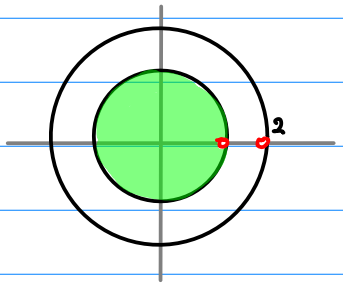

$$\sum_{n=-1}^{-\infty} \left[-1 + 2^{n-1}\right] z^{-n}$$

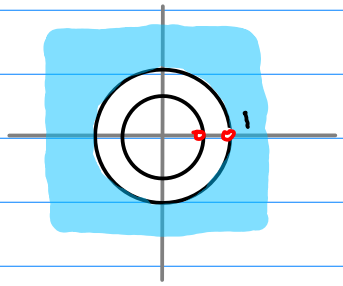

$$\sum_{n=-1}^{-\infty} \left(1 - \left(\frac{1}{2}\right)^{n+1}\right) z^{n}$$

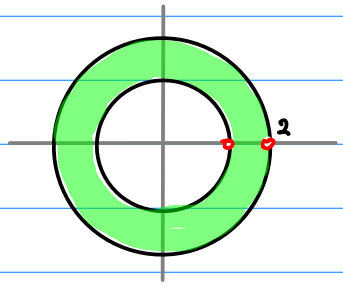

$$\sum_{n=1}^{\infty} z^{-n} + \sum_{n=0}^{-\infty} 2^{n-1} \cdot z^{-n}$$

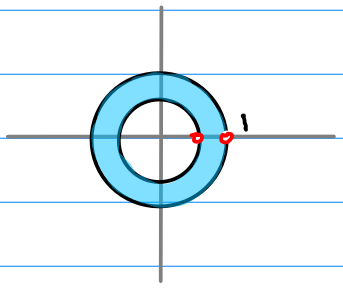

$$\sum_{n=-1}^{-\infty} z^{n} + \sum_{n=0}^{\infty} \left(\frac{1}{2}\right)^{n+1} \cdot z^{n}$$

$$X(z) = \frac{-1}{(z-1)(z-2)} = \frac{1}{z-1} - \frac{1}{z-2}$$

Z.T. first

① D_1 $|z|>2$ $\left[\left|\frac{1}{z}\right|<1,\ \left|\frac{2}{z}\right|<1\right]$

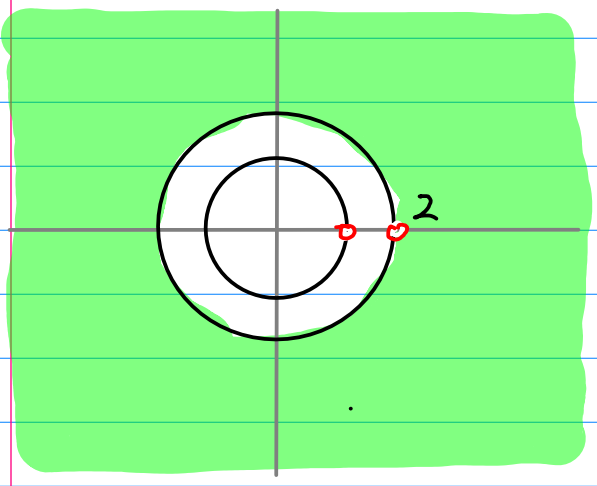

$|z|>\frac{1}{2} \Rightarrow \frac{1}{|2z|}<1$

$\left(\frac{2}{z}\right)^0 + \left(\frac{2}{z}\right)^1 + \left(\frac{2}{z}\right)^2 + \cdots \rightarrow \frac{1}{1-\frac{2}{z}}$ Converge

$|z|>1 \Rightarrow \frac{1}{|z|}<1$

$\left(\frac{1}{z}\right)^0 + \left(\frac{1}{z}\right)^1 + \left(\frac{1}{z}\right)^2 + \cdots \rightarrow \frac{1}{1-\frac{1}{z}}$ Converge

R.O.C (Region of Convergence)

$$f(z) = \frac{1}{z-1} - \frac{1}{z-2} = \frac{1}{z}\frac{z}{z-1} - \frac{1}{z}\frac{z}{z-2} = \frac{1}{z}\frac{1}{1-(\frac{1}{z})} - \frac{1}{z}\frac{1}{1-(\frac{2}{z})}$$

$$= \sum_{n=0}^{\infty} \frac{1}{z^{n+1}} - \sum_{n=0}^{\infty} \frac{2^n}{z^{n+1}} = \sum_{n=0}^{\infty} \frac{1-2^n}{z^{n+1}}$$

$$= \sum_{n=1}^{\infty} \frac{1-2^{n-1}}{z^n} = \sum_{n=1}^{\infty} (1-2^{n-1})\, z^{-n}$$

$\left(\frac{1}{2}\right) + \left(\frac{1}{2}\right)^2 + \left(\frac{1}{2}\right)^3 + \cdots$

$+ \frac{1}{2}\left\{\left(\frac{2}{z}\right) + \left(\frac{2}{z}\right)^2 + \left(\frac{2}{z}\right)^3 + \cdots\right\}$ Converge $\rightarrow \frac{1}{z-1} - \frac{1}{z-2} = \frac{-1}{(z-1)(z-2)}$

$(1-2^0)z^{-1} + (1-2^1)z^{-2} + (1-2^2)z^{-3} + \cdots$ Converge $\rightarrow \frac{-1}{(z-1)(z-2)}$ $(|z|>2)$

$$x[n] = 1-2^{n-1} \quad \longleftrightarrow \quad X(z) = \frac{-1}{(z-1)(z-2)} \quad (|z|>2)$$

(II) D_2 $|z|<1$ $\left[\left|\frac{z}{1}\right|<1,\ \left|\frac{z}{2}\right|<1\right]$

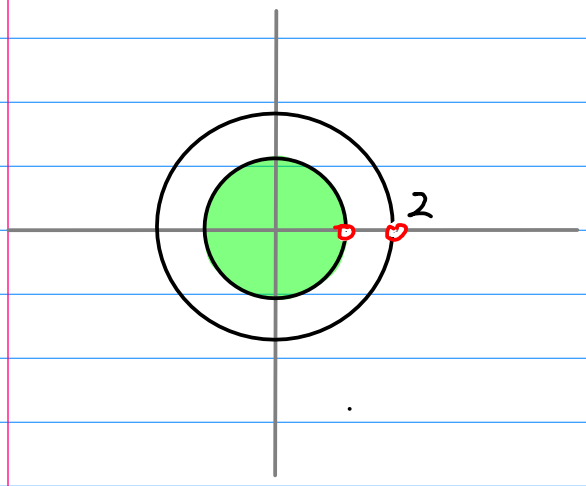

$|z|<2 \Rightarrow \frac{|z|}{2}<1$

$\left(\frac{z}{2}\right)^0+\left(\frac{z}{2}\right)^1+\left(\frac{z}{2}\right)^2+\cdots \rightarrow \frac{1}{1-\frac{z}{2}}$ Converge

$|z|<1 \Rightarrow \frac{|z|}{1}<1$

$\left(\frac{z}{1}\right)^0+\left(\frac{z}{1}\right)^1+\left(\frac{z}{1}\right)^2+\cdots \rightarrow \frac{1}{1-\frac{z}{1}}$ Converge

ROC (Region of convergence)

$$f(z)=\frac{1}{z-1}-\frac{1}{z-2}=-\frac{1}{1}\frac{1}{1-z}+\frac{1}{2}\frac{2}{2-z}=-\frac{1}{1}\frac{1}{1-\left(\frac{z}{1}\right)}+\frac{1}{2}\frac{1}{1-\left(\frac{z}{2}\right)}$$

$$=-\sum_{n=0}^{\infty}z^n+\frac{1}{2}\sum_{n=0}^{\infty}\frac{z^n}{2^n}=\sum_{n=0}^{\infty}\left(-1+2^{-n-1}\right)z^n$$

$$=\sum_{k=0}^{-\infty}\left(-1+2^{-k-1}\right)z^{-k}=\sum_{n=0}^{-\infty}\left(-1+2^{n-1}\right)z^{-n}$$

$$-\left\{\left(\frac{z}{1}\right)+\left(\frac{z}{1}\right)^2+\left(\frac{z}{1}\right)^3+\cdots\right\}$$
$$+\frac{1}{2}\left\{\left(\frac{z}{2}\right)+\left(\frac{z}{2}\right)^2+\left(\frac{z}{2}\right)^3+\cdots\right\}$$

Converge $\rightarrow \frac{1}{z-1}-\frac{1}{z-2}=\frac{-1}{(z-1)(z-2)}$

$$\left(-1+2^{-2}\right)z^1+\left(-1+2^{-3}\right)z^2+\left(-1+2^{-4}\right)z^3+\cdots$$

Converge $\rightarrow \frac{-1}{(z-1)(z-2)}$ $(|z|<2)$

$$x[n]=-1+2^{n} \quad \Longleftrightarrow \quad X(z)=\frac{-1}{(z-1)(z-2)} \quad (|z|>2)$$

$n \le 0$

Z.T. first

(iii) D_3 $1<|z|<2$ $\left[\left|\frac{1}{z}\right|<1,\ \left|\frac{z}{2}\right|<1\right]$

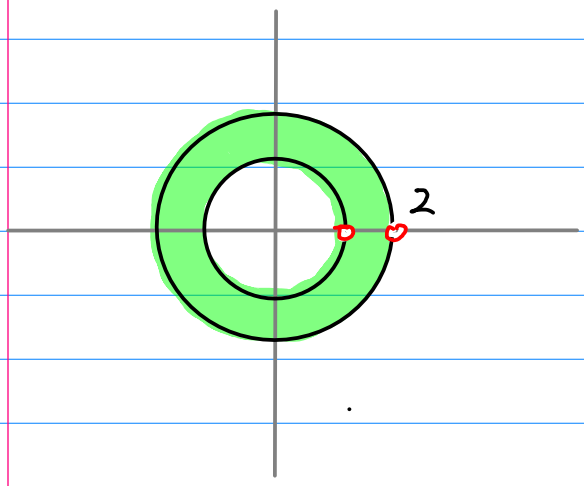

$|z|<2 \Rightarrow \frac{|z|}{2}<1$

$\left(\frac{z}{2}\right)^0+\left(\frac{z}{2}\right)^1+\left(\frac{z}{2}\right)^2+\cdots \rightarrow \frac{1}{1-\frac{z}{2}}$

Converge

$|z|>1 \Rightarrow \frac{1}{|z|}<1$

$\left(\frac{1}{z}\right)^0+\left(\frac{1}{z}\right)^1+\left(\frac{1}{z}\right)^2+\cdots \rightarrow \frac{1}{1-\frac{1}{z}}$

Converge

ROC (Region of Convergence)

$$f(z)=\frac{1}{z-1}-\frac{1}{z-2}=\frac{1}{z}\frac{z}{z-1}+\frac{1}{2}\frac{2}{z-2}=\frac{1}{z}\frac{1}{1-\left(\frac{1}{z}\right)}+\frac{1}{2}\frac{1}{1-\left(\frac{z}{2}\right)}$$

$$=\sum_{n=0}^{\infty}\frac{1}{z^{n+1}}+\sum_{n=0}^{\infty}\frac{z^n}{2^{n+1}}=\sum_{n=0}^{\infty}\frac{1}{z^{n+1}}+\sum_{k=0}^{-\infty}\frac{z^{-k}}{2^{-k+1}}=\sum_{n=1}^{\infty}z^{-n}+\sum_{n=0}^{-\infty}2^{n-1}z^{-n}$$

$$x_n=\begin{cases}1 & (n>0)\\ 2^{n-1} & (n\le 0)\end{cases}$$

$\left(\frac{1}{2}\right)+\left(\frac{1}{2}\right)^2+\left(\frac{1}{2}\right)^3+\cdots$

$+\frac{1}{2}\left\{\left(\frac{z}{2}\right)+\left(\frac{z}{2}\right)^2+\left(\frac{z}{2}\right)^3+\cdots\right\}$ → Converge

$\frac{1}{z-1}-\frac{1}{z-2}=\frac{-1}{(z-1)(z-2)}$

Z.T. first

$$X(z) = \frac{-1}{(z-1)(z-2)} = \frac{1}{z-1} - \frac{1}{z-2}$$

Ⅰ D_1 $|z| > 2$ causal $x_n = 0$ $(n \le 0)$

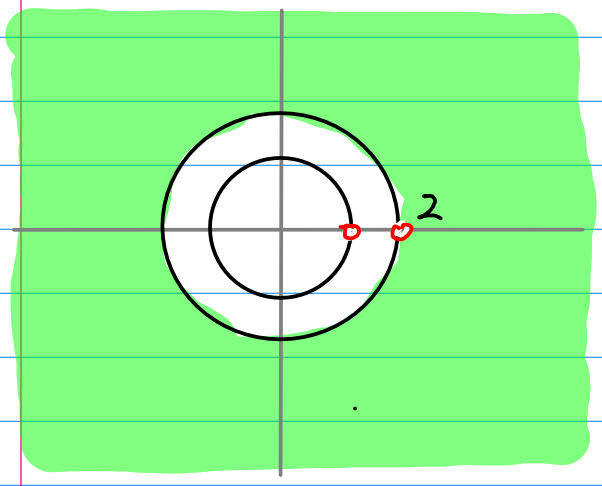

$$X(z) = \frac{-1}{(z-1)(z-2)}$$

$$x_n = \begin{cases} 1 - 2^{n-1} & (n > 0) \\ 0 & (n \le 0) \end{cases}$$

Ⅱ D_3 $|z| < 1$ anti-causal $x_n = 0$ $(n \ge 0)$

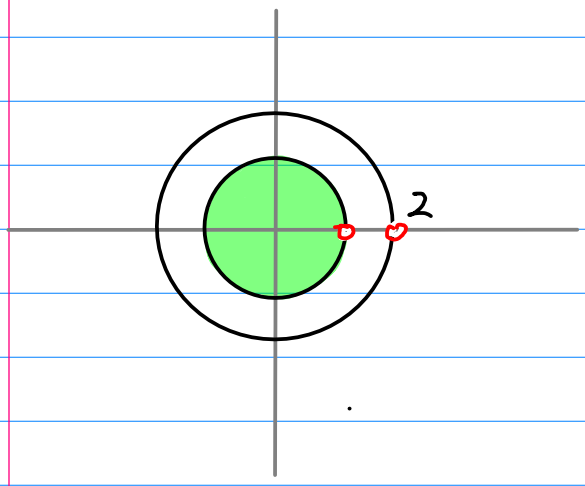

$$X(z) = \frac{-1}{(z-1)(z-2)}$$

$$x_n = \begin{cases} 0 & (n > 0) \\ 2^{n-1} - 1 & (n \le 0) \end{cases}$$

Ⅲ D_2 $1 < |z| < 2$ two-sided

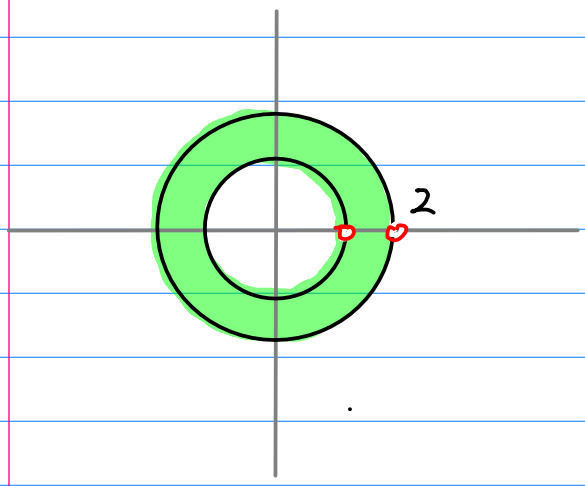

$$X(z) = \frac{-1}{(z-1)(z-2)}$$

$$x_n = \begin{cases} 1 & (n > 0) \\ 2^{n-1} & (n \le 0) \end{cases}$$

Z.T. first

$$X(z) = \frac{-1}{(z-1)(z-2)} = \frac{1}{z-1} - \frac{1}{z-2}$$

---

① D_1 $\quad |z| > 2$ $\quad$ causal $\quad x_n = 0 \quad (n < 0)$

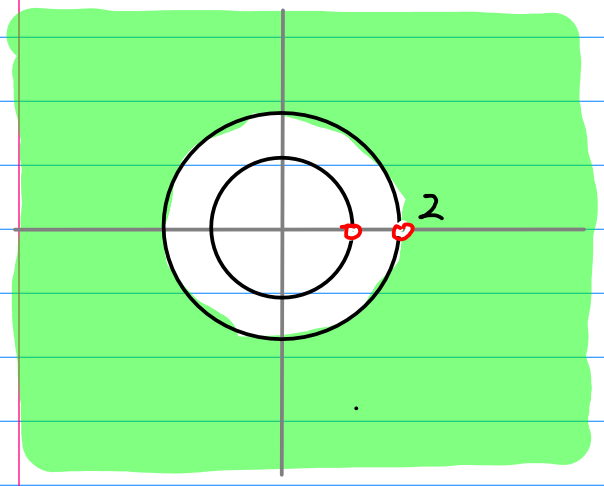

$$\left|\frac{1}{z}\right| < 1 \qquad \left|\frac{2}{z}\right| < 1$$

$$X(z) = \frac{\left(\frac{1}{z}\right)}{1-\left(\frac{1}{z}\right)} - \frac{\left(\frac{1}{z}\right)}{1-\left(\frac{2}{z}\right)}$$

$$= \sum_{n=0}^{\infty} 1 \cdot z^{-n-1} - \sum_{n=0}^{\infty} 2^n z^{-n-1}$$

$$= \sum_{n=1}^{\infty} \left[1 - 2^{-n+1}\right] z^{-n}$$

---

② D_3 $\quad |z| < 1$ $\quad$ anti-causal $\quad x_n = 0 \quad (n > 0)$

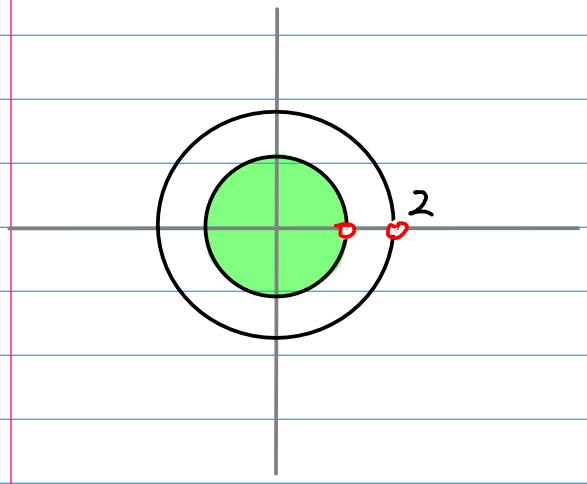

$$\left|\frac{z}{1}\right| < 1 \qquad \left|\frac{z}{2}\right| < 1$$

$$X(z) = \frac{-1}{1-\left(\frac{z}{1}\right)} + \frac{\frac{1}{2}}{1-\left(\frac{z}{2}\right)}$$

$$= -\sum_{n=0}^{\infty} 1 \cdot z^{n} - \sum_{n=0}^{\infty} 2^{-n-1} z^{n}$$

$$= \sum_{n=-1}^{-\infty} \left[-1 + 2^{n-1}\right] z^{-n}$$

---

③ D_2 $\quad 1 < |z| < 2$ $\quad$ two-sided

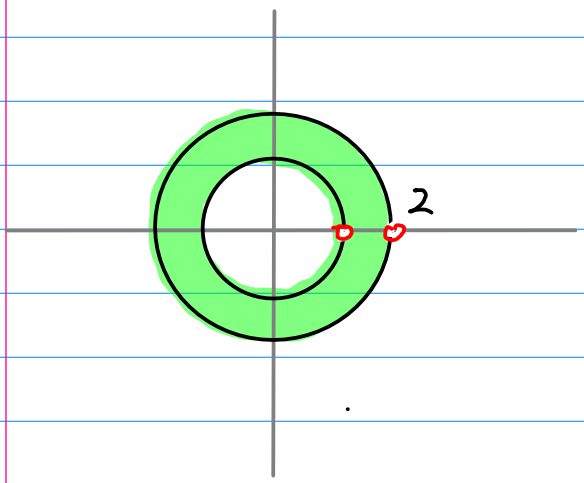

$$\left|\frac{1}{z}\right| < 1 \qquad \left|\frac{z}{2}\right| < 1$$

$$X(z) = \frac{\left(\frac{1}{z}\right)}{1-\left(\frac{1}{z}\right)} + \frac{\left(\frac{1}{2}\right)}{1-\left(\frac{z}{2}\right)}$$

$$= \sum_{n=0}^{\infty} 1 \cdot z^{-n-1} + \sum_{n=0}^{\infty} 2^{-n-1} z^{n}$$

$$= \sum_{n=1}^{\infty} z^{-n} + \sum_{n=0}^{-\infty} 2^{n-1} \cdot z^{-n}$$

Z.T. first

$$X(z) = \frac{-1}{(z-1)(z-2)} = \frac{1}{z-1} - \frac{1}{z-2}$$

Ⅰ D_1 $|z| > 2$ causal $x_n = 0 \quad (n < 0)$

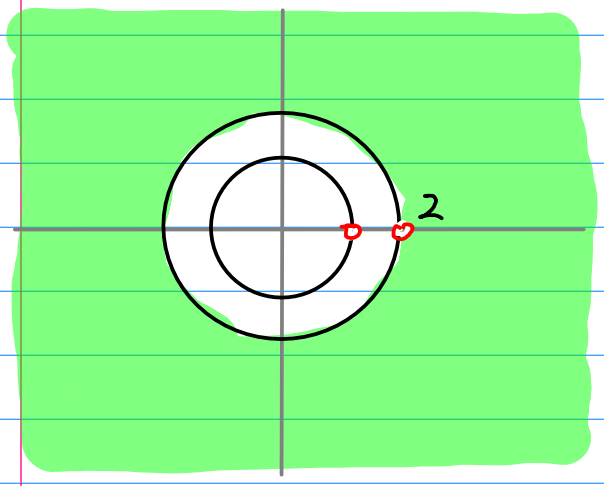

$$X(z) = \sum_{n=1}^{\infty} \left[1 - 2^{-n+1}\right] z^{-n}$$

Ⅱ D_3 $|z| < 1$ anti-causal $x_n = 0 \quad (n > 0)$

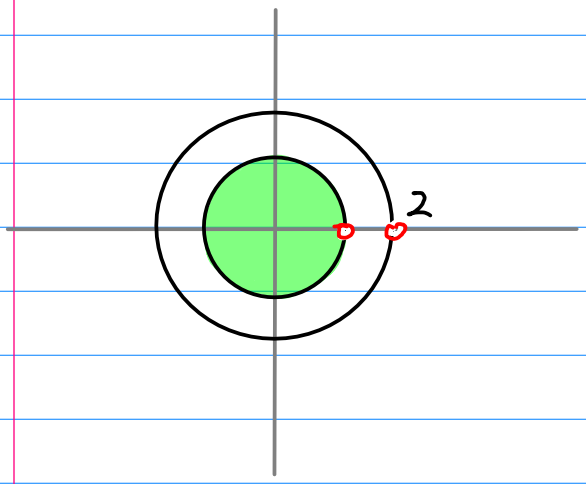

$$X(z) = \sum_{n=-1}^{\infty} \left[-1 + 2^{n-1}\right] z^{-n}$$

Ⅲ D_2 $1 < |z| < 2$ two-sided

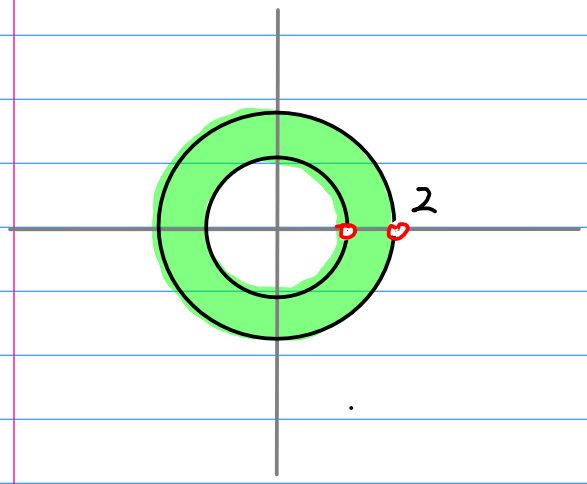

$$X(z) = \sum_{n=1}^{\infty} z^{-n} + \sum_{n=0}^{-\infty} 2^{n-1} \cdot z^{-n}$$

$$X(z) = \frac{-1}{(z-1)(z-2)} \qquad f(z) =$$

Z.T. first

① -1

① $D_1 \qquad |z| > 2 \qquad \left[\left|\frac{1}{z}\right| < 1 \;,\quad \left|\frac{2}{z}\right| < 1\right]$

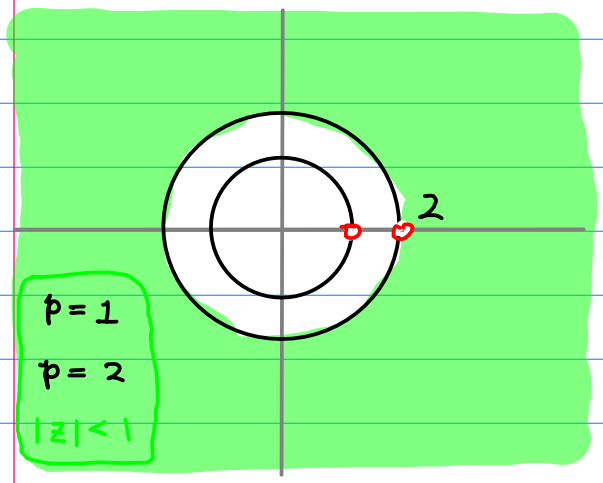

$$X(z) = \frac{1}{z-1} - \frac{1}{z-2}$$

$$= \frac{\left(\frac{1}{z}\right)}{1-\left(\frac{1}{z}\right)} - \frac{\left(\frac{1}{z}\right)}{1-\left(\frac{2}{z}\right)}$$

$$= \sum_{n=0}^{\infty} 1\, z^{-n-1} - \sum_{n=0}^{\infty} 2^n z^{-n-1}$$

$$= \sum_{n=1}^{\infty} \left[1 - 2^{n-1}\right] z^{-n}$$

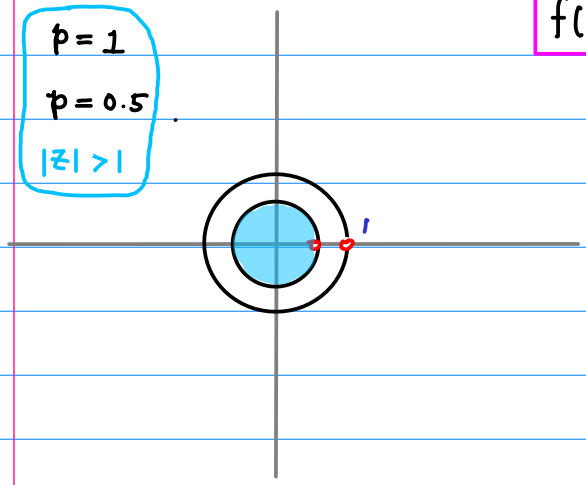

$$f(z) = X(z^{-1}) = \sum_{n=1}^{\infty} \left[1 - 2^{n-1}\right] z^{n}$$

$$= \sum_{n=1}^{\infty} 1 \cdot z^n - 2^{n-1} \cdot z^n$$

$$= \frac{z}{1-\left(\frac{z}{1}\right)} - \frac{z}{1-\left(\frac{2z}{1}\right)}$$

$$= -\frac{z}{z-1} + \frac{0.5z}{(z-0.5)}$$

$$= \frac{-z+0.5+0.5z-0.5}{(z-1)(z-0.5)}\, z$$

$$= \frac{-0.5z^2}{(z-1)(z-0.5)}$$

$$X(z) = \frac{-1}{(z-1)(z-2)}$$

$$X(z^{-1}) = \frac{-1}{(z^{-1}-1)(z^{-1}-2)} = \frac{-z^2}{(1-z)(1-2z)} = \frac{-0.5z^2}{(z-1)(z-0.5)} = f(z)$$

$$X(z) = \frac{-1}{(z-1)(z-2)} \qquad f(z) =$$

Z.T. first

(II) -1

(II) D_2 $\quad |z|<1 \quad \left[\left|\frac{z}{1}\right|<1,\ \left|\frac{z}{2}\right|<1\right]$

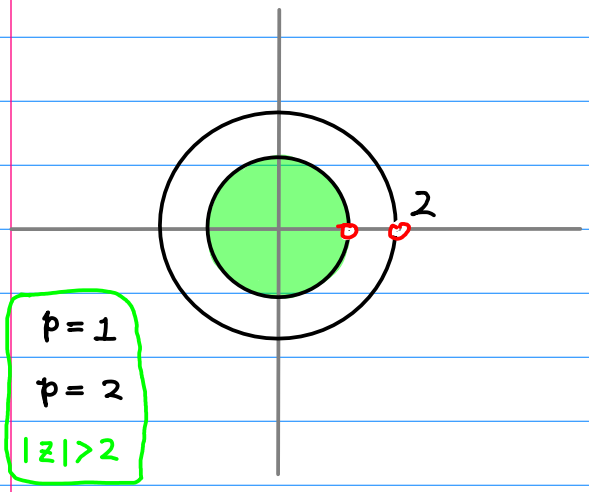

$$X(z) = \frac{1}{z-1} - \frac{1}{z-2}$$

$$= \frac{-1}{1-\left(\frac{z}{1}\right)} + \frac{\frac{1}{2}}{1-\left(\frac{z}{2}\right)}$$

$$= \sum_{n=0}^{\infty} (-1)\left(\frac{z}{1}\right)^n + \sum_{n=0}^{\infty} \left(\frac{1}{2}\right)\left(\frac{z}{2}\right)^n$$

$$= -\sum_{n=0}^{\infty} 1 \cdot z^n + \sum_{n=0}^{\infty} 2^{-n-1} z^n$$

$$= \sum_{n=0}^{-\infty} \left[-1 + 2^{n-1}\right] z^{-n}$$

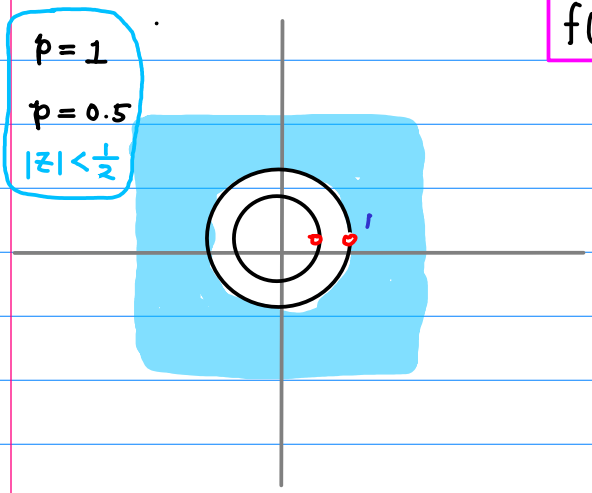

$$f(z) = X(z^{-1}) = \sum_{n=0}^{-\infty} \left[-1 + 2^{n-1}\right] z^{n}$$

$$= \sum_{n=0}^{\infty} -1 \cdot z^{-n} + \sum_{n=0}^{\infty} 2^{-n-1} \cdot z^{-n}$$

$$= -\frac{1}{1-\left(\frac{1}{z}\right)} + \frac{\frac{1}{2}}{1-\left(\frac{1}{2z}\right)}$$

$$= -\frac{z}{z-1} + \frac{0.5z}{z-0.5}$$

$$= \frac{-z+0.5+0.5z-0.5}{(z-1)(z-0.5)} z$$

$$= \frac{-0.5z^2}{(z-1)(z-0.5)}$$

$$X(z) = \frac{-1}{(z-1)(z-2)}$$

$$X(z^{-1}) = \frac{-1}{(z^{-1}-1)(z^{-1}-2)} = \frac{-z^2}{(1-z)(1-2z)} = \frac{-0.5z^2}{(z-1)(z-0.5)} = f(z)$$

$$X(z) = \frac{-1}{(z-1)(z-2)} \qquad f(z) =$$

Z.T. first

(III) -1

(III) D_3 $1 < |z| < 2$ $\left[\left|\frac{1}{z}\right| < 1 \;,\quad \left|\frac{z}{2}\right| < 1\right]$

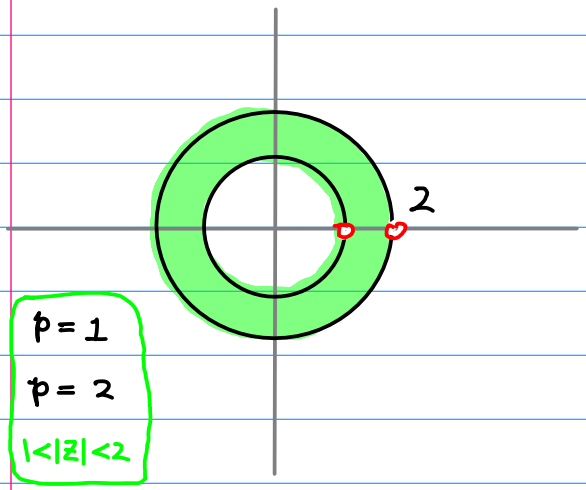

p = 1

p = 2

1<|z|<2

$$X(z) = \frac{1}{z-1} - \frac{1}{z-2}$$

$$= \frac{\left(\frac{1}{z}\right)}{1-\left(\frac{1}{z}\right)} + \frac{\left(\frac{-1}{2}\right)}{1-\left(\frac{z}{2}\right)}$$

$$= \sum_{n=0}^{\infty} \left(\frac{1}{z}\right)\left(\frac{1}{z}\right)^n + \sum_{n=0}^{\infty} \left(\frac{-1}{2}\right)\left(\frac{z}{2}\right)^n$$

$$= \sum_{n=0}^{\infty} z^{-n-1} + \sum_{n=0}^{\infty} 2^{-n-1} z^n$$

$$= \sum_{n=1}^{\infty} z^{-n} + \sum_{n=0}^{-\infty} 2^{n-1} \cdot z^{-n}$$

p = 1

p = 0.5

$\frac{1}{2} < |z| < 1$

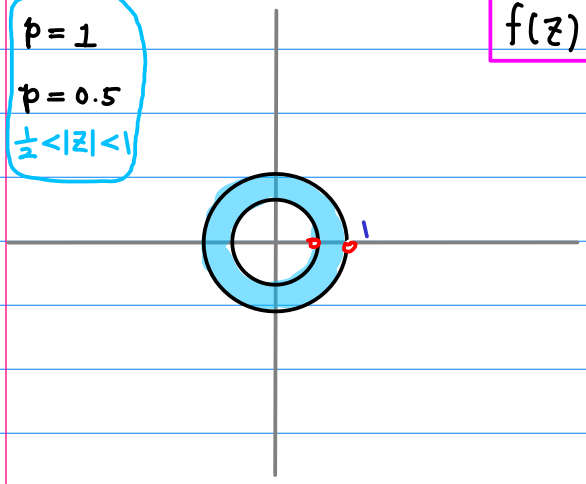

$$f(z) = X(z^{-1}) = \sum_{n=1}^{\infty} z^n + \sum_{n=0}^{-\infty} 2^{n-1} \cdot z^n$$

$$= \sum_{n=1}^{\infty} z^n + \sum_{n=0}^{\infty} 2^{-n-1} \cdot z^{-n}$$

$$= \frac{\left(\frac{z}{1}\right)}{1-\left(\frac{z}{1}\right)} + \frac{\left(\frac{1}{2}\right)}{1-\left(\frac{1}{2z}\right)}$$

$$= \frac{-z}{z-1} + \frac{0.5z}{z-0.5}$$

$$= \frac{-z+0.5+0.5z-0.5}{(z-1)(z-0.5)} z$$

$$= \frac{-0.5z^2}{(z-1)(z-0.5)}$$

$$X(z) = \frac{-1}{(z-1)(z-2)}$$

$$X(z^{-1}) = \frac{-1}{(z^{-1}-1)(z^{-1}-2)} = \frac{-z^2}{(1-z)(1-2z)} = \frac{-0.5z^2}{(z-1)(z-0.5)} = f(z)$$